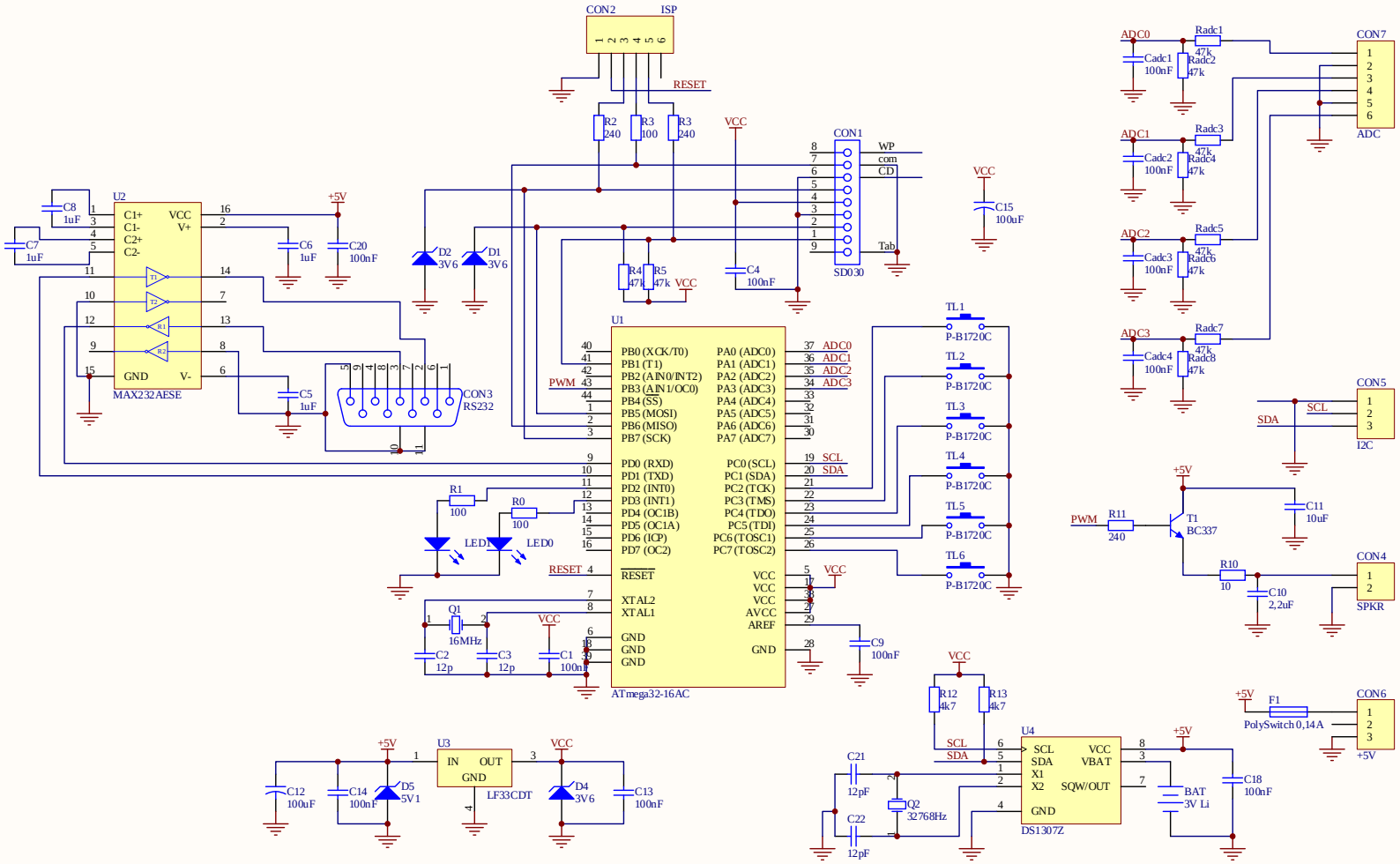
CON2
ISP
RESET
R2 240
R3 100
R3 240
VCC
CON1
WP
com
CD
Tab
SD030
C15 100uF
U2
C8 1uF
C7 1uF
C1+
C1-
C2+
C2-
VCC
V+
GND
V-
MAX232AESE
+5V
C6 1uF
C20 100nF
C5 1uF
CON3
RS232
D2 3V6
D1 3V6
R4 47k
R5 47k
C4 100nF
U1
PB0 (XCK/T0)
PB1 (T1)
PB2 (AIN0/INT2)
PB3 (AIN1/OC0)
PB4 (SS)
PB5 (MOSI)
PB6 (MISO)
PB7 (SCK)
PD0 (RXD)
PD1 (TXD)
PD2 (INT0)
PD3 (INT1)
PD4 (OC1B)
PD5 (OC1A)
PD6 (ICP)
PD7 (OC2)
RESET
XTAL2
XTAL1
GND
PA0 (ADC0)
PA1 (ADC1)
PA2 (ADC2)
PA3 (ADC3)
PA4 (ADC4)
PA5 (ADC5)
PA6 (ADC6)
PA7 (ADC7)
PC0 (SCL)
PC1 (SDA)
PC2 (TCK)
PC3 (TMS)
PC4 (TDO)
PC5 (TDI)
PC6 (TOSC1)
PC7 (TOSC2)
VCC
AVCC
AREF
ATmega32-16AC
PWM
SCL
SDA
R1 100
R0 100
LED1
LED0
Q1 16MHz
C2 12p
C3 12p
C1 100nF
C9 100nF
TL1
TL2
TL3
TL4
TL5
TL6
P-B1720C
ADC0
ADC1
ADC2
ADC3
Radc1 47k
Radc2 47k
Radc3 47k
Radc4 47k
Radc5 47k
Radc6 47k
Radc7 47k
Radc8 47k
Cadc1 100nF
Cadc2 100nF
Cadc3 100nF
Cadc4 100nF
CON7
ADC
CON5
I2C
CON4
SPKR
T1 BC337
R11 240
R10 10
C11 10uF
C10 2,2uF
CON6
F1 PolySwitch 0,14A
U3
IN
OUT
GND
LF33CDT
C12 100uF
C14 100nF
D5 5V1
D4 3V6
C13 100nF
R12 4k7
R13 4k7
U4
SCL
SDA
X1
X2
VCC
VBAT
SQW/OUT
GND
DS1307Z
C21 12pF
C22 12pF
Q2 32768Hz
BAT 3V Li
C18 100nF